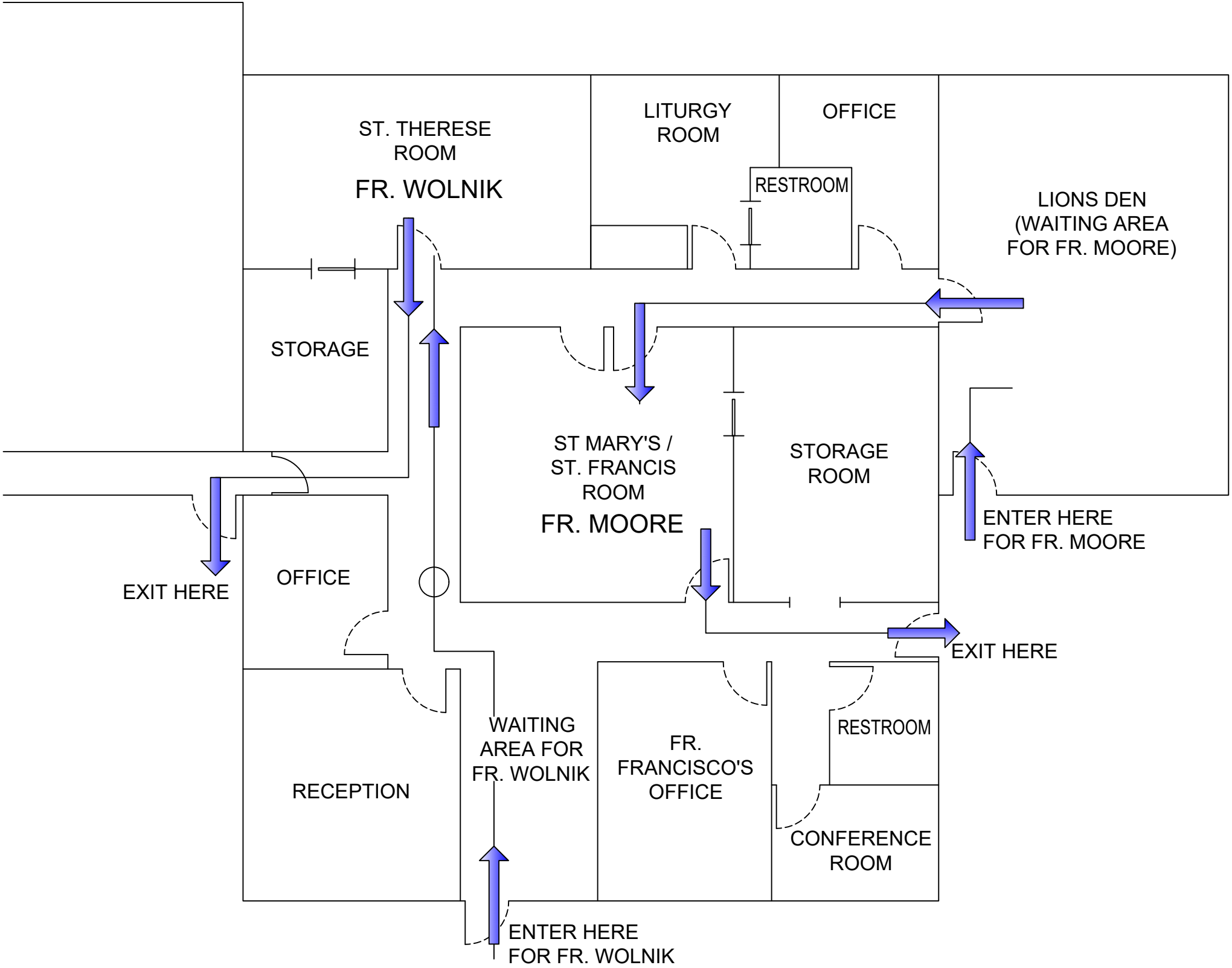
ST. THERESE ROOM
FR. WOLNIK
LITURGY ROOM
OFFICE
RESTROOM
LIONS DEN (WAITING AREA FOR FR. MOORE)
STORAGE
ST MARY'S / ST. FRANCIS ROOM
FR. MOORE
STORAGE ROOM
ENTER HERE FOR FR. MOORE
EXIT HERE
OFFICE
EXIT HERE
RECEPTION
WAITING AREA FOR FR. WOLNIK
FR. FRANCISCO'S OFFICE
RESTROOM
CONFERENCE ROOM
ENTER HERE FOR FR. WOLNIK